REV	DESCRIPTION	DRAWN/DATE	CHECKED/DATE	APVD/DATE
00		ECW 01-19-17		

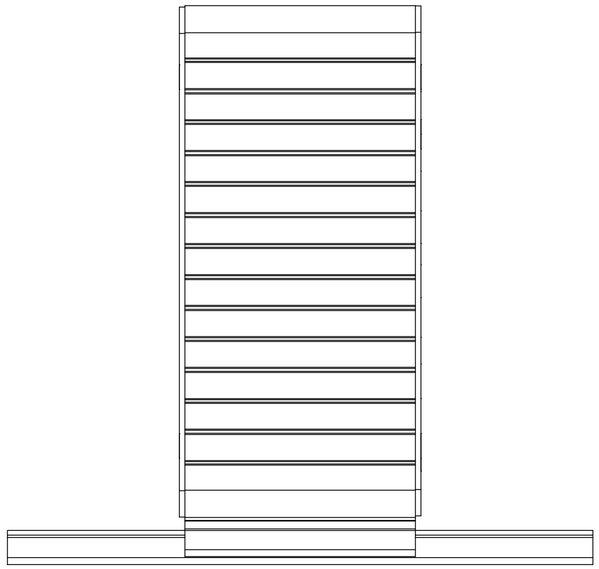

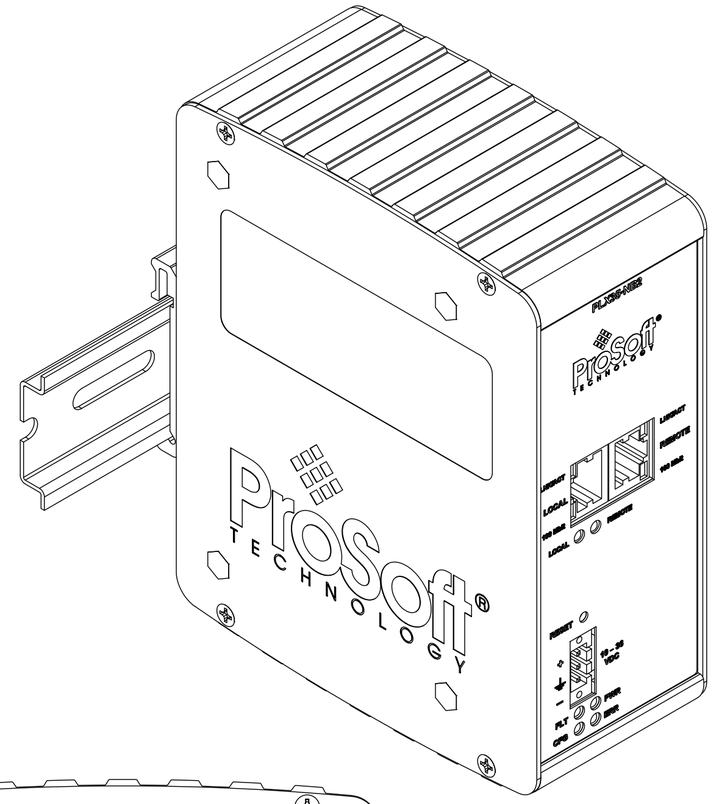

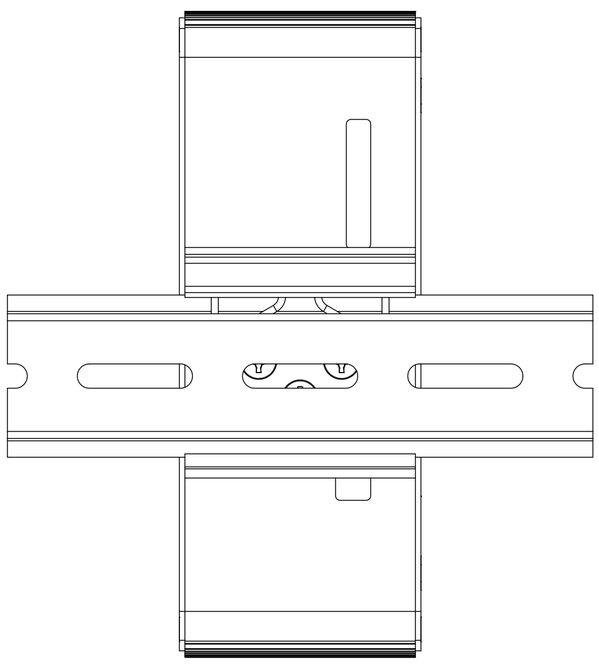

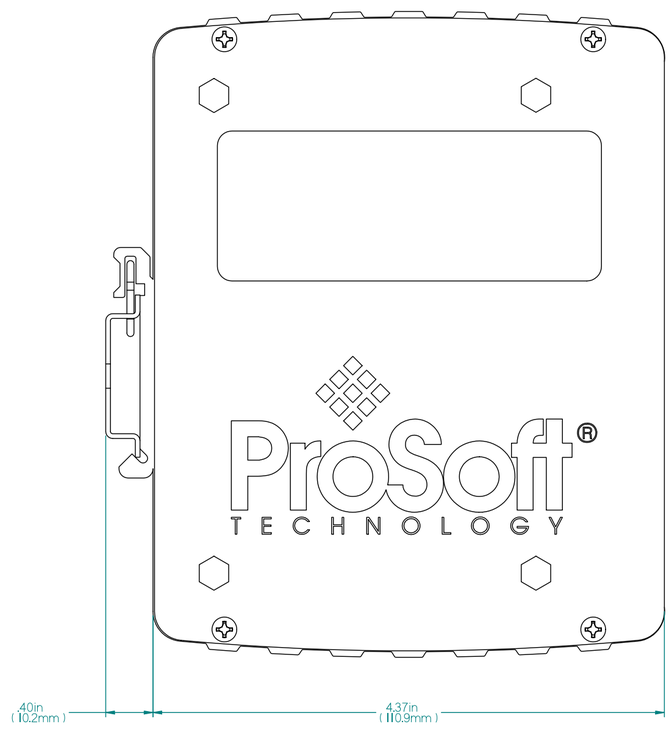

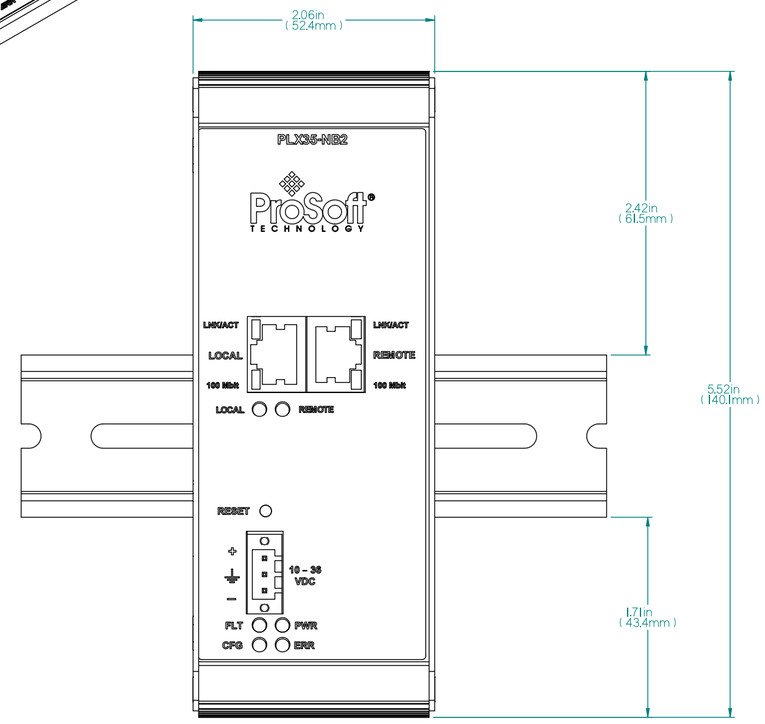

ProSoft Technology, Inc.
9201 Camino Media, Suite #200
Bakersfield, CA 93311
+1 661-716-5100
www.prosoft-technology.com

TITLE
DWG, PRODUCT, PLX35-NB2

THIRD ANGLE PROJECTION

Copyright ©2017 ProSoft Technology, Inc. All rights reserved.
Specifications subject to change without notice.

SIZE	PART/DRAWING NO.	REV	SCALE	SHEET
C	971-1006	00	1:1	1 OF 1